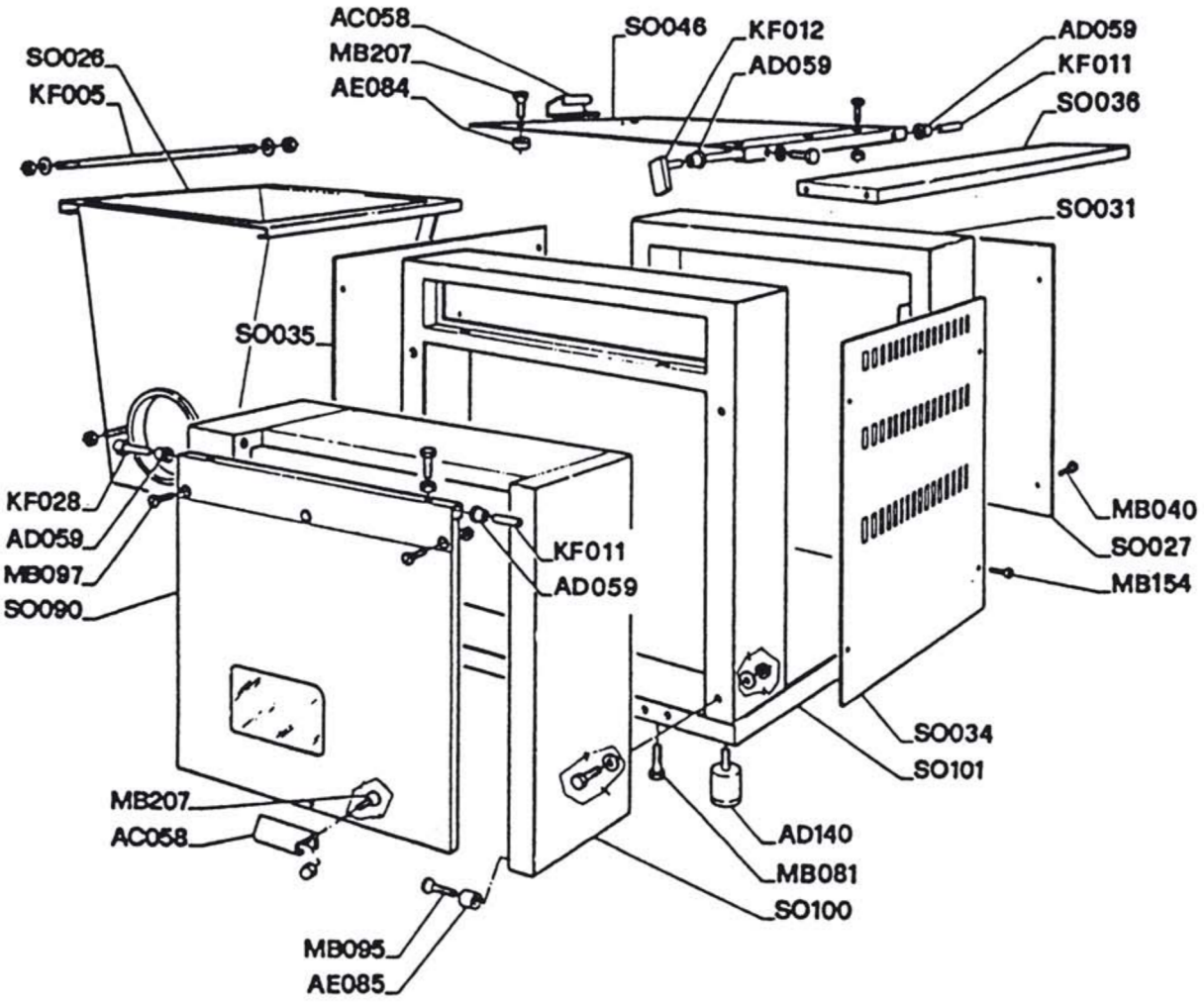
AC058
MB207
AE084
SO046
KF012
AD059
AD059
KF011
SO036
SO026
KF005
SO031
SO035
KF028
AD059
MB097
SO090
KF011
AD059
MB040
SO027
MB154
SO034
SO101
MB207
AC058
AD140
MB081
SO100
MB095
AE085

TAV. 1

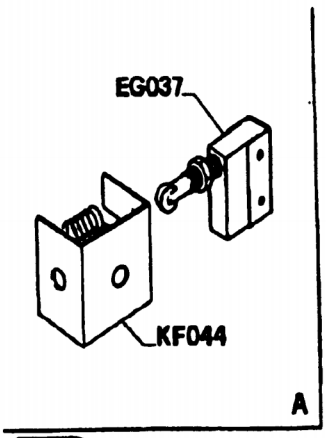

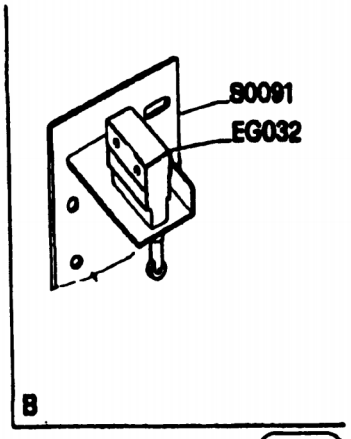

SQ5

SQ6

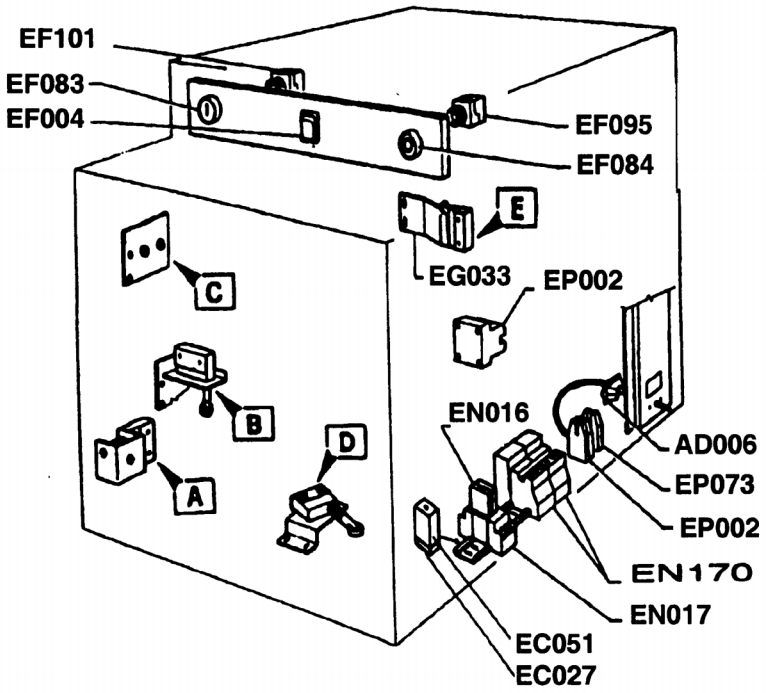

SQ2

SQ3

SQ1

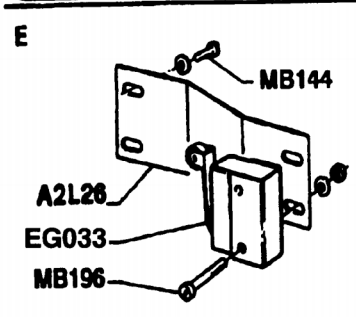

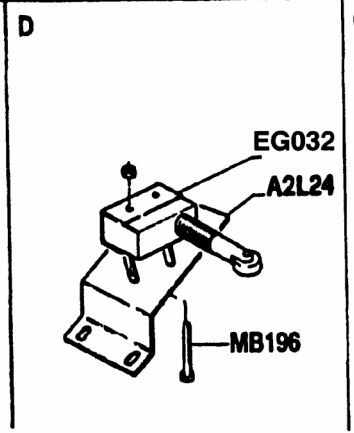

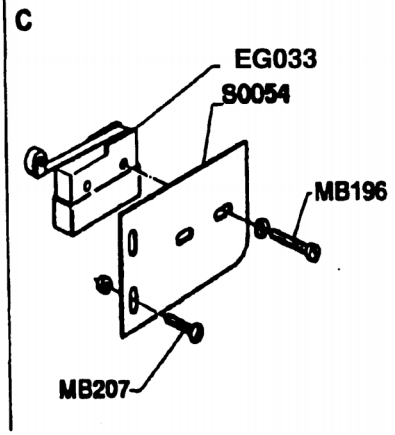

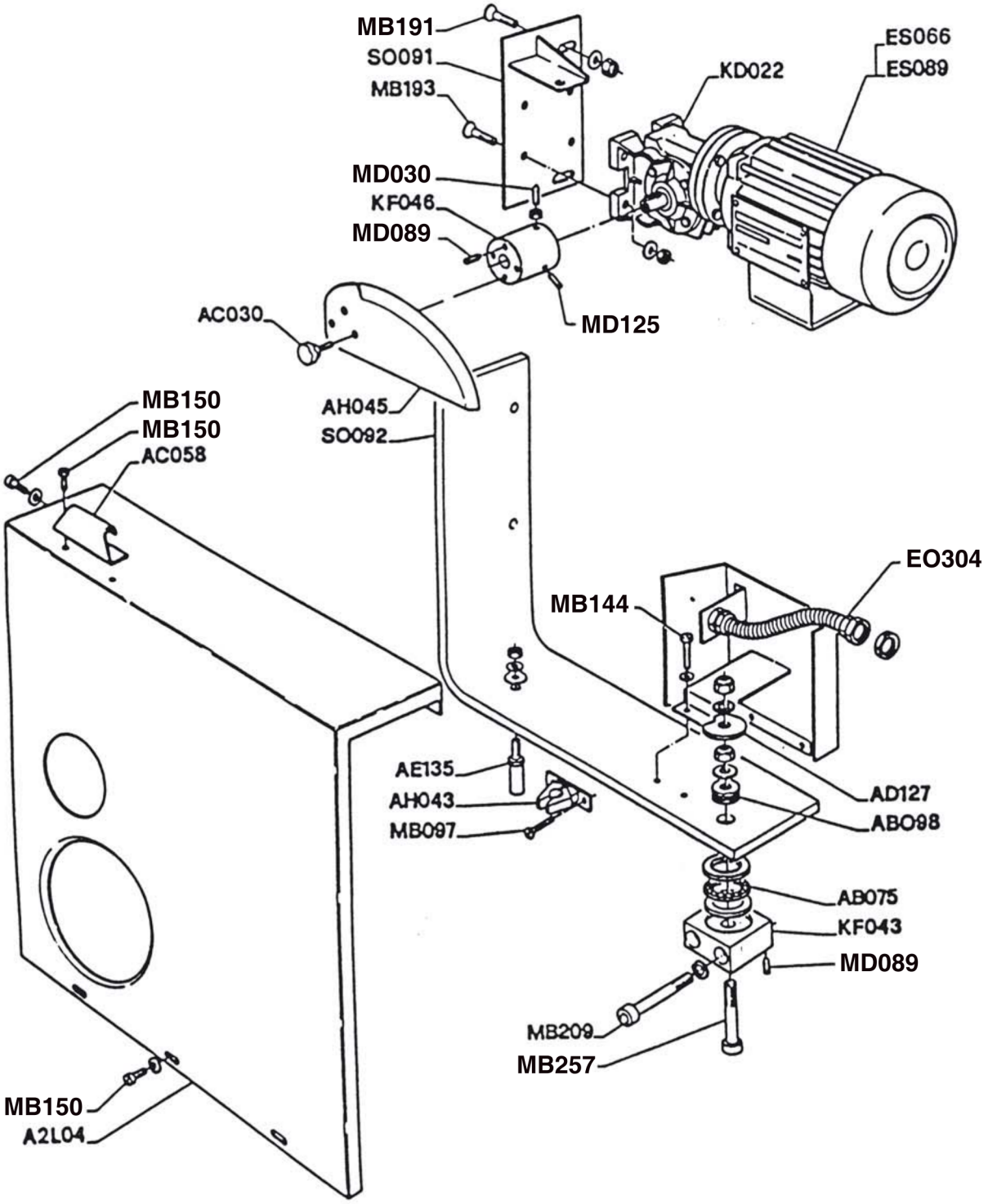
MB191
SO091
MB193
MD030
KF046
MD089
AC030
MD125
KD022
ES066
ES089
MB150
MB150
AC058
AH045
SO092
EO304
MB144
AE135
AH043
MB097
AD127
ABO98
AB075
KF043
MD089
MB209
MB257
MB150
A2L04

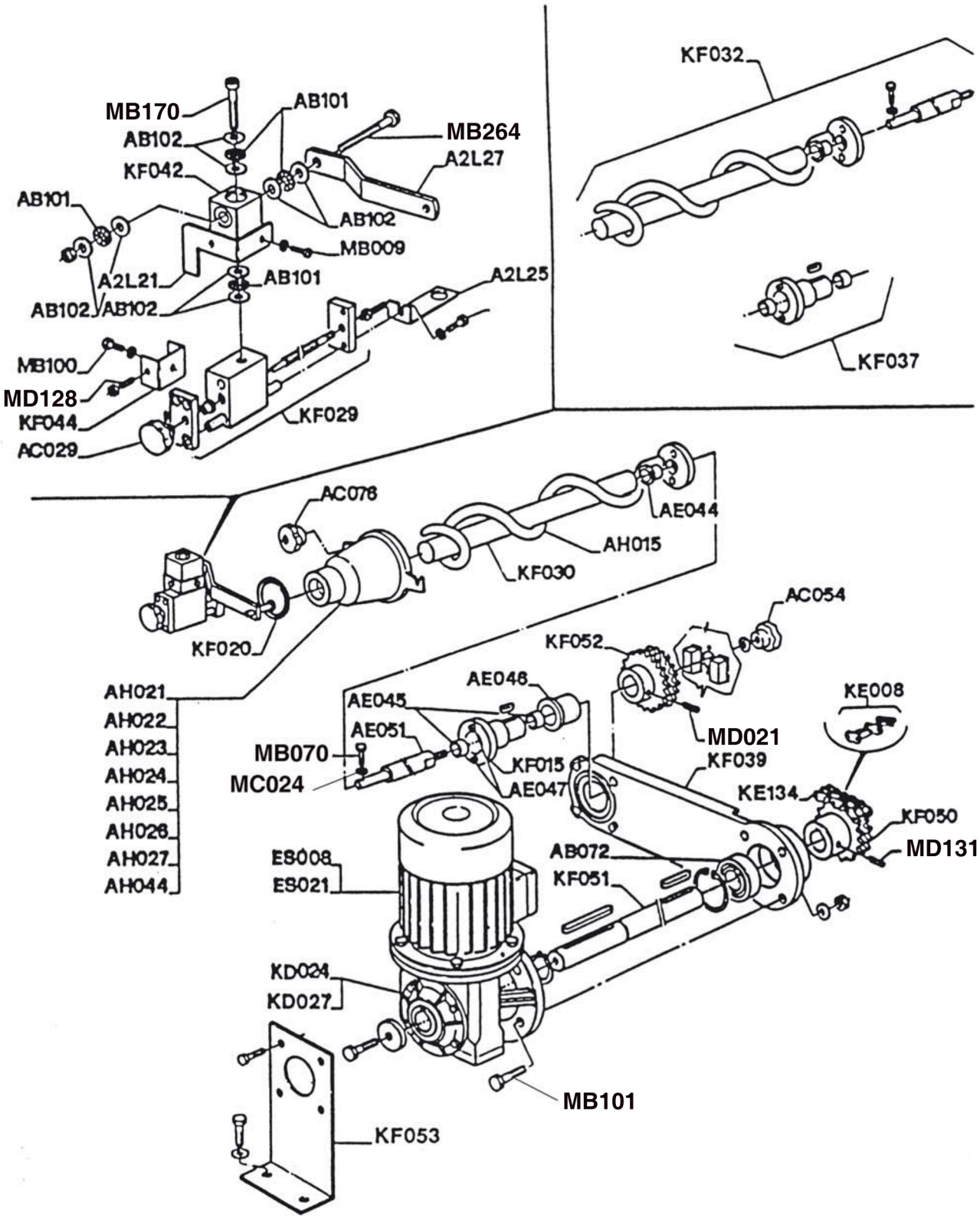
MB170
AB101
AB102
MB264
A2L27
KF042
AB101
AB102
MB009
A2L21
AB101
A2L25
AB102
AB102
MB100
MD128
KF044
AC029
KF029
KF032
KF037
AC076
AE044
AH015
KF030
KF020
AC054
KF052
AE046
AE045
AE051
MB070
MC024
KF015
AE047
MD021
KF039
KE008
KE134
KF050
MD131
AB072
KF051
AH021
AH022
AH023
AH024
AH025
AH026
AH027
AH044
ES008
ES021
KD024
KD027
MB101
KF053

TAV. 4

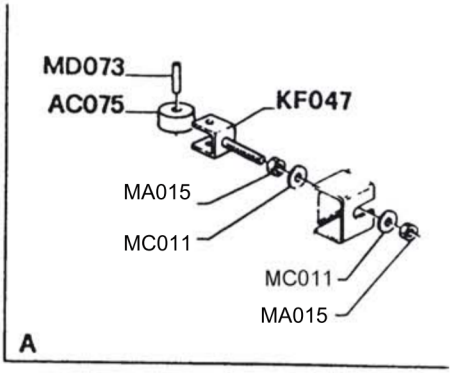
MD073
AC075
KF047
MA015
MC011
MC011
MA015
A

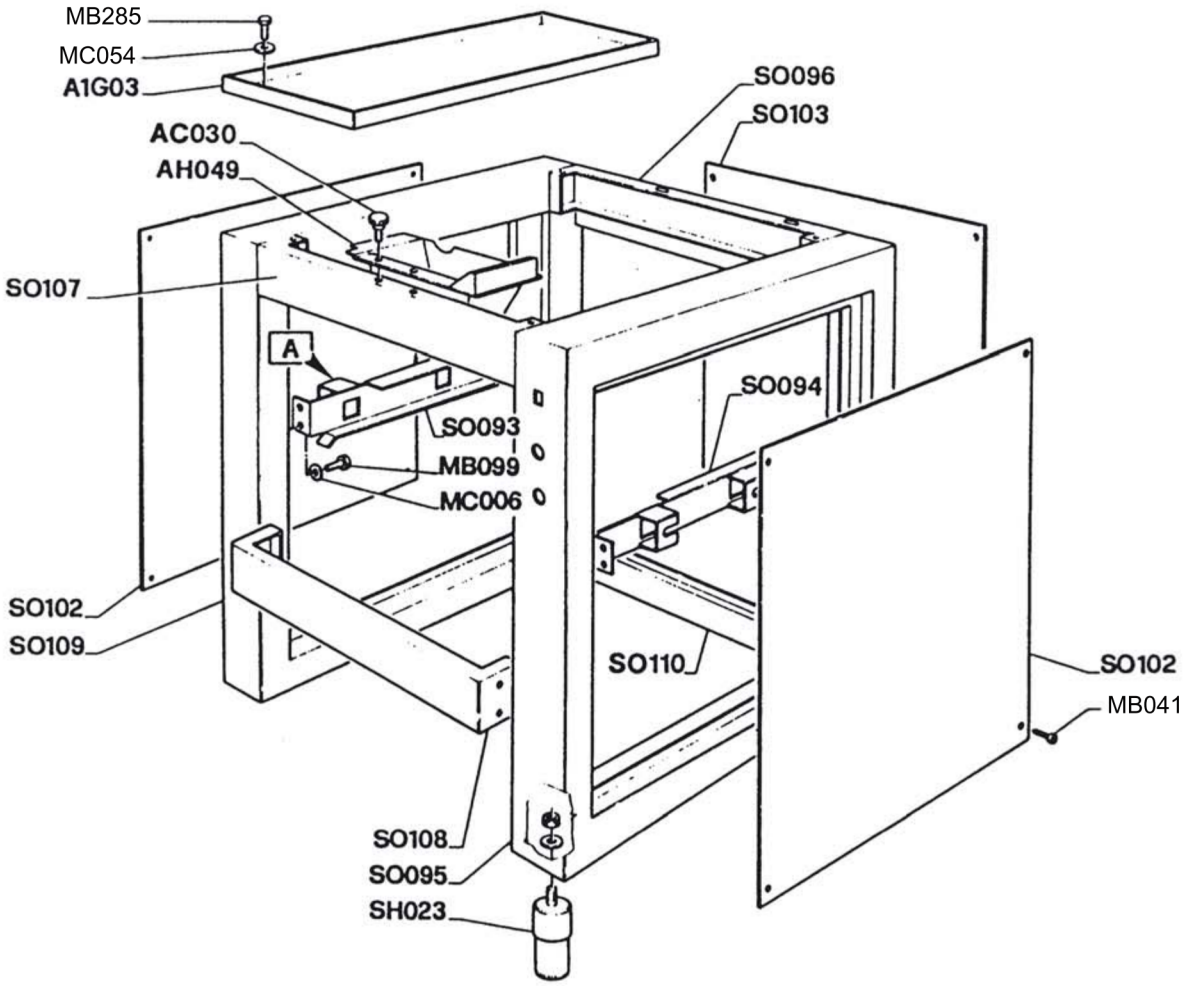
MB285
MC054
A1G03
AC030
AH049
SO107
SO096
SO103
A
SO093
MB099
MC006
SO094
SO102
SO109
SO110
SO102
MB041
SO108
SO095
SH023

TAV. 5

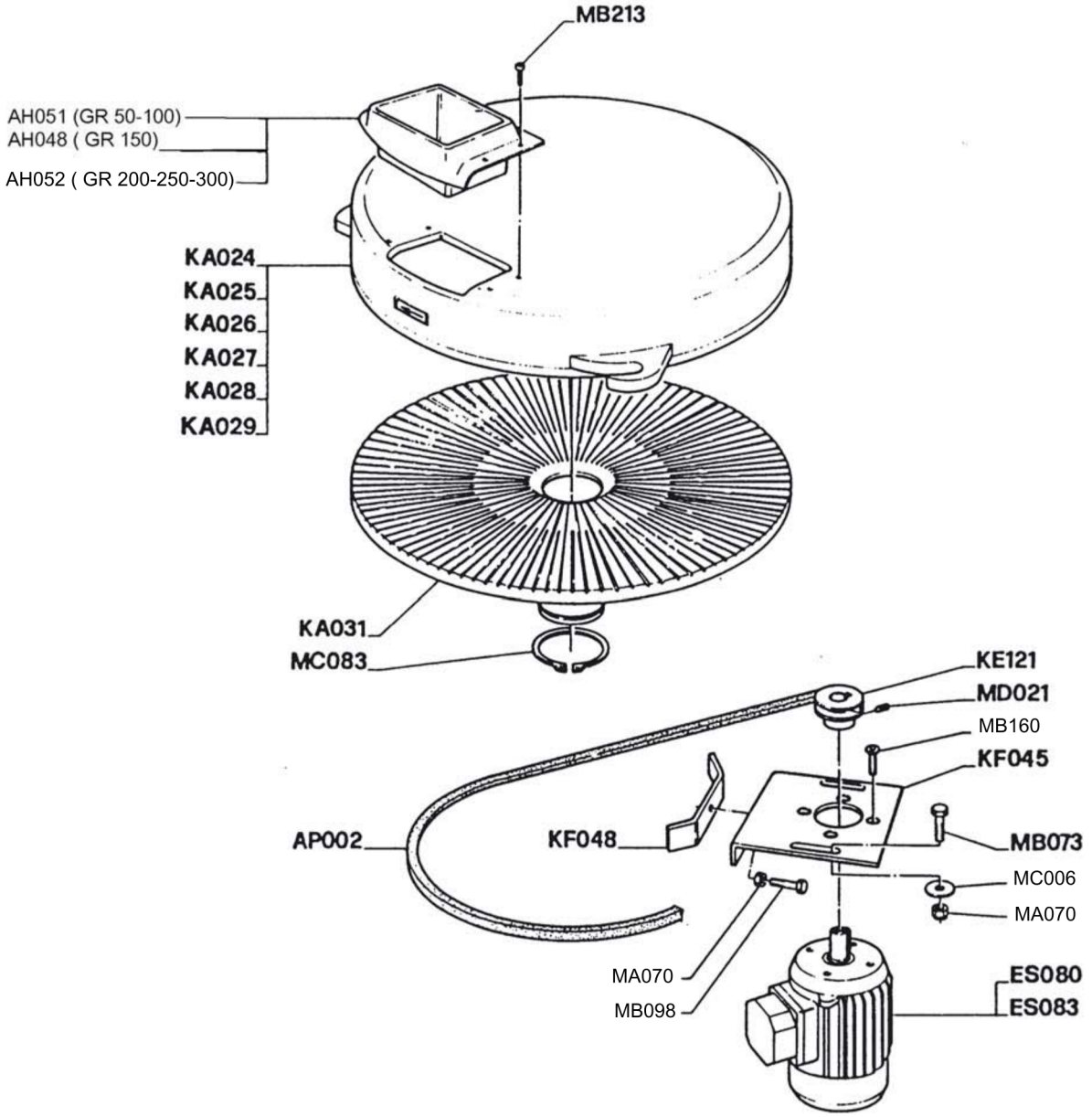
MB213
AH051 (GR 50-100)
AH048 (GR 150)
AH052 (GR 200-250-300)
KA024
KA025
KA026
KA027
KA028
KA029
KA031
MC083
KE121
MD021
MB160
KF045
AP002
KF048
MB073
MC006
MA070
MA070
MB098
ES080
ES083

TAV. 6

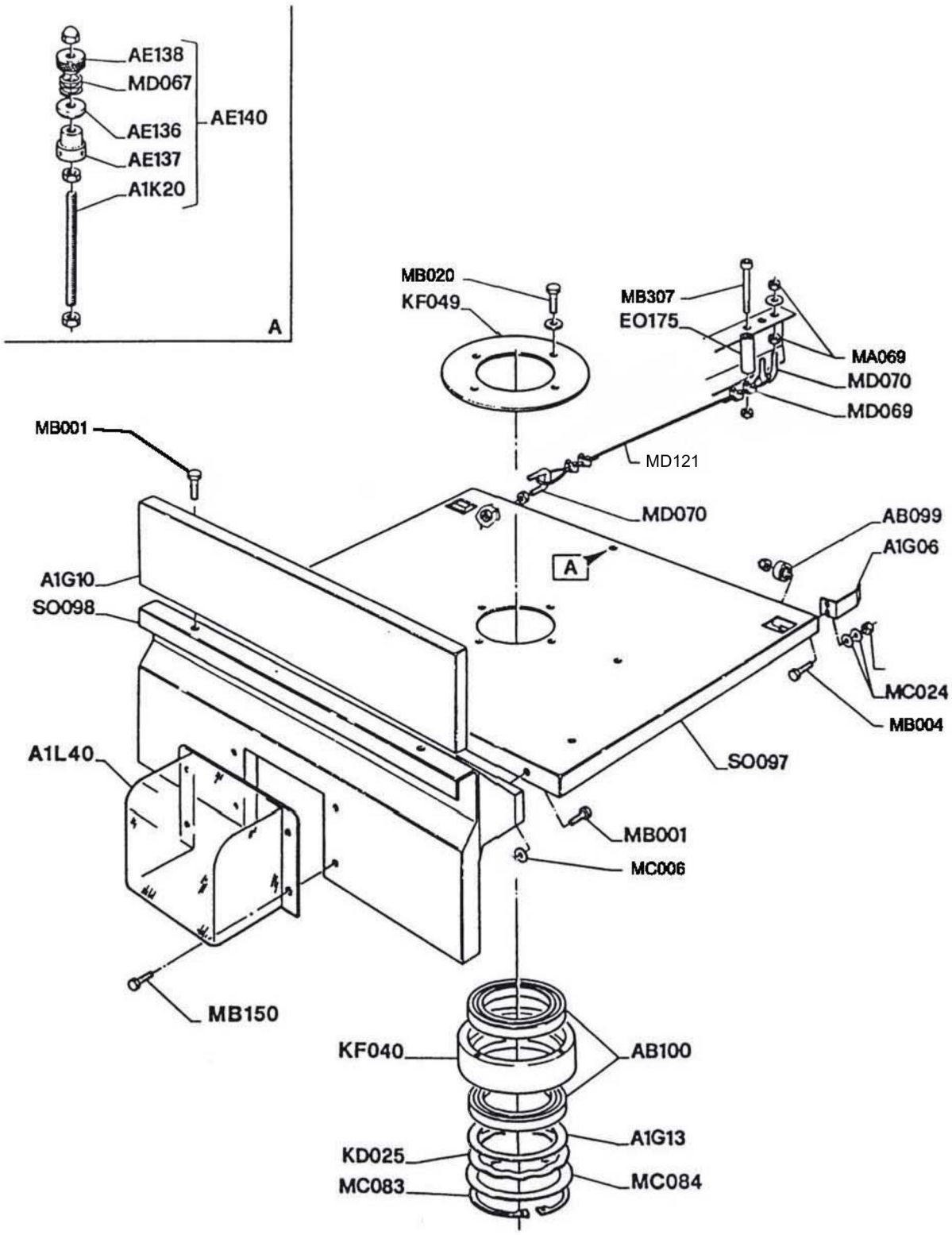
AE138
MD067
AE136
AE137
A1K20
AE140
A
MB020
KF049
MB307
EO175
MA069
MD070
MD069
MB001
MD121
MD070
AB099
A1G06
A1G10
SO098
A
MC024
MB004
A1L40
SO097
MB001
MC006
MB150
KF040
AB100
A1G13
KD025
MC083
MC084

TAV. 7

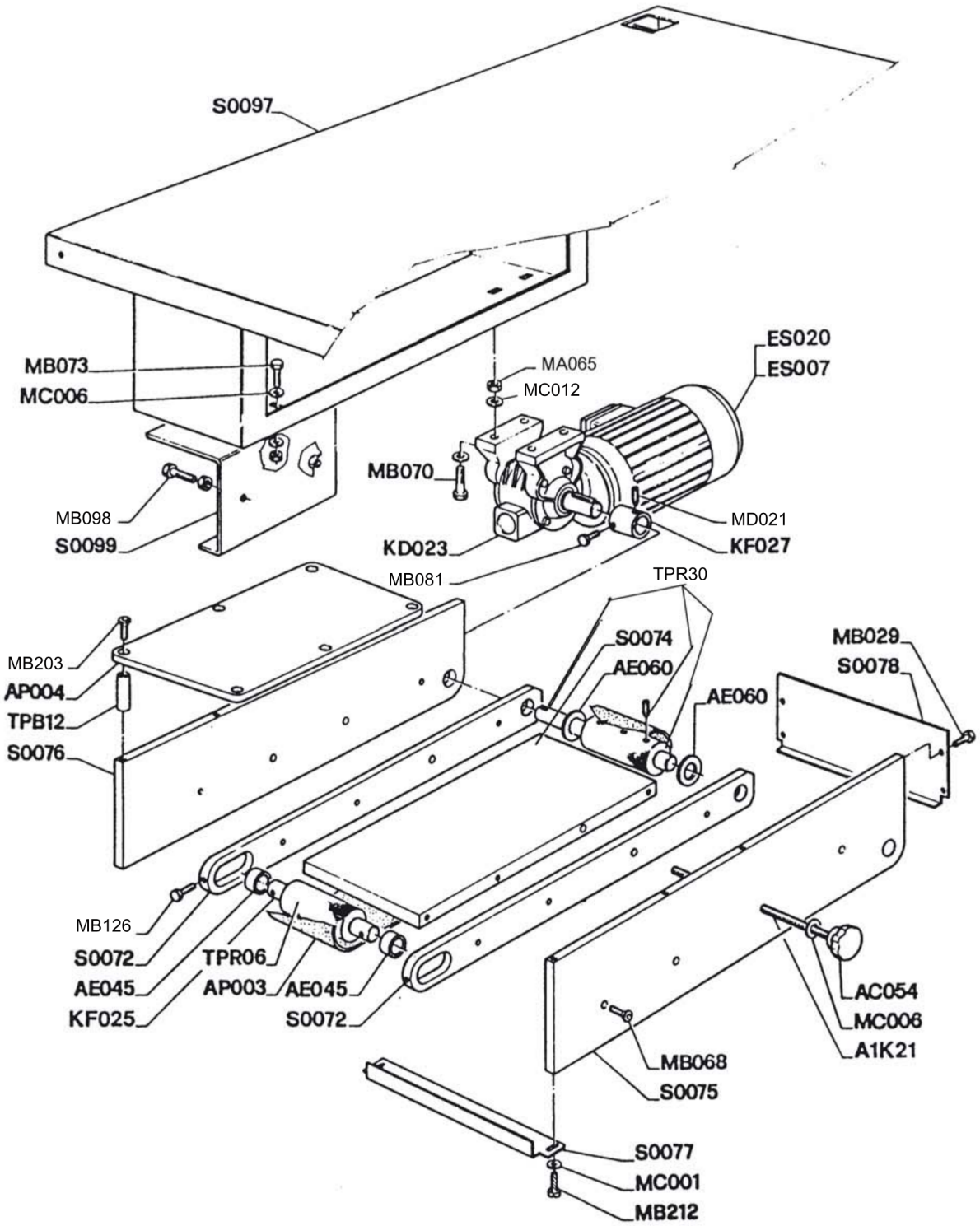
S0097
MB073
MC006
MA065
MC012
ES020
ES007
MB070
MB098
S0099
KD023
MD021
KF027
MB081
TPR30
MB203
AP004
TPB12
S0076
S0074
AE060
AE060
MB029
S0078
MB126
S0072
AE045
KF025
TPR06
AP003
AE045
S0072
AC054
MC006
A1K21
MB068
S0075
S0077
MC001
MB212

TAV. 8

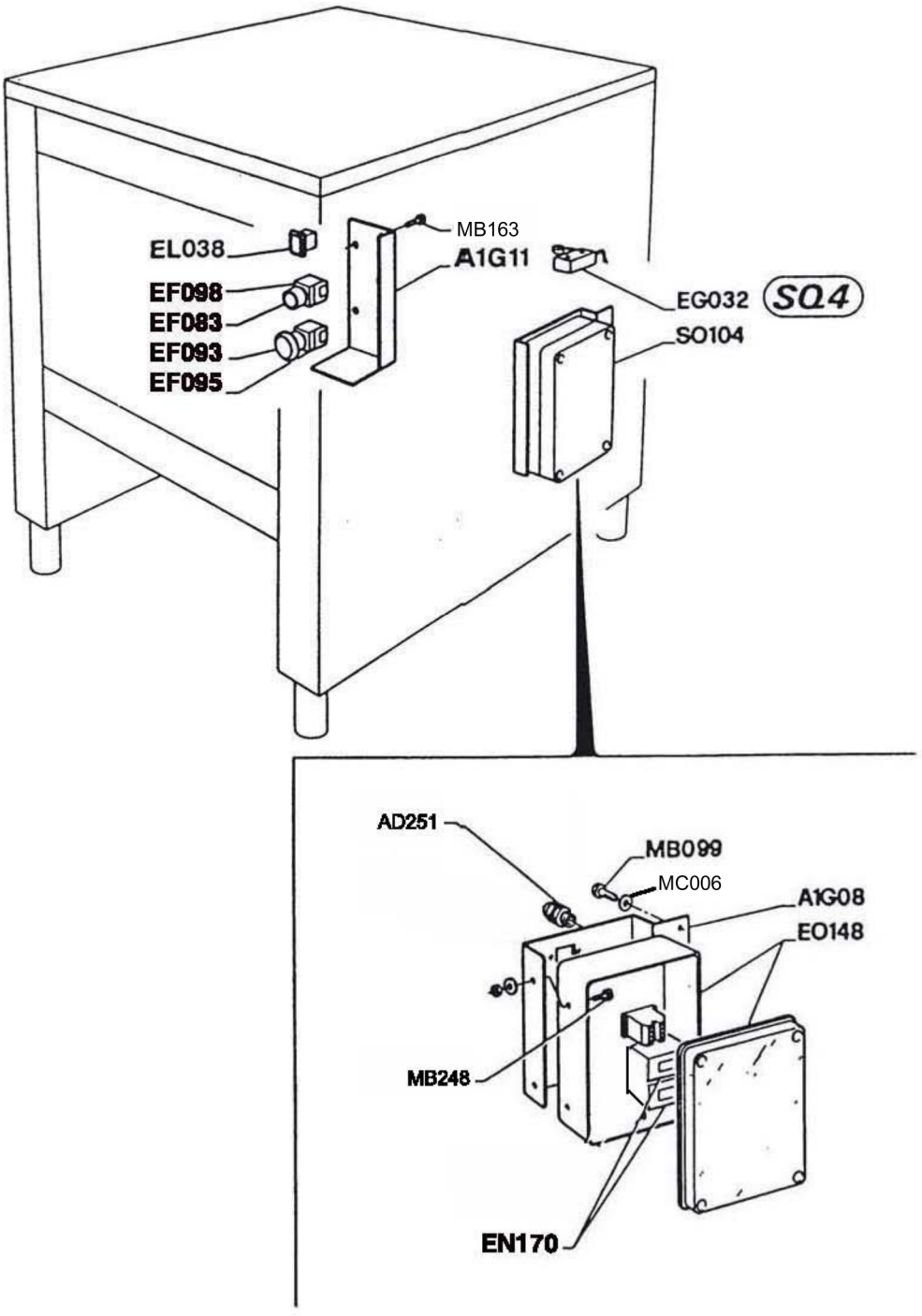
MB163
EL038
A1G11
EF098
EF083
EF093
EF095
EG032
SQ4
SO104
AD251
MB099
MC006
A1G08
EO148
MB248
EN170

TAV. 9